Ex belt-alignment switches
// Ex ZS 75 SR 2Ö/2S - 3m Order no.: 75331303

Features/Options

- Ex zone 1 and 21
- Metal enclosure
- 4 contacts
- Cable
- Belt-alignment roller made of stainless steel 1.4104
- N.B.: Please state required approvals for Russia, China and Brazil with your order!

Dimensions

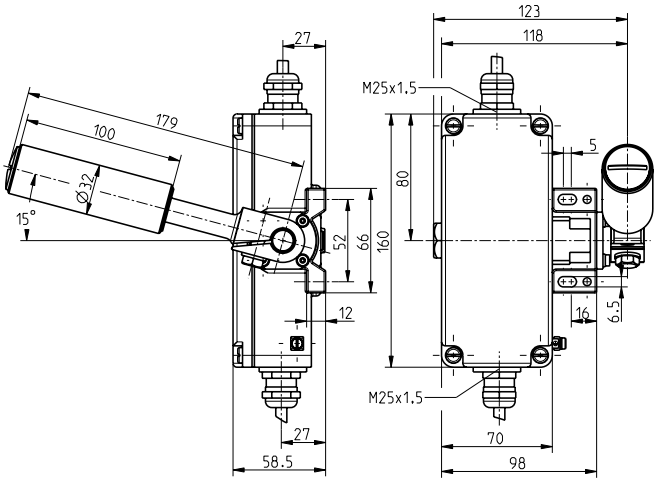

Switching diagram

Slow action

2 NC/2 NO contacts

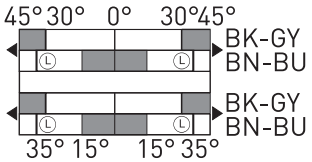

Technical data

Standards	EN 60947-5-1, -5; EN 60079-0, EN 60079-1, EN 60079-31; EN ISO 13849-1
Enclosure	aluminium die-cast, enamel finish
Cover	aluminium die-cast, enamel finish
Switch insert	Ex 14
Degree of protection	IP 65 to IEC/EN 60529
Contact material	silver
Switching system	slow action, positive break NC contact ⊖
Switching elements	2 NC/2NO contacts with double break
Connection	cable H05VV-F
Cable section	4 x 0.75 mm^2 (incl. conductor ferrules) per switch insert
Cable length	3 m
B_{10d} (10% load)	2 million
T_M	max. 20 years
U_{imp}	4 kV
U_i	250 V
I_{the}	T6: 6 A; T5: 3 A
I_e/U_e	6 A/250 VAC; 0,25 A/230 VDC
Utilisation category	AC-15, DC-13
Max. fuse rating	6 A gG/gN fuse
Ambient temperature	T6: –20°C ... +65°C; T5: –20°C ... +95°C
Mechanical life	> 1 million operations
Ex marking	Ⓔx II 2G Ex d IIC T6/T5 Gb, Ⓔx II 2D Ex tb IIIC T80°C/T95°C Db IP65 IECEx Ex d IIC T6/T5 Gb, Ex tb IIIC T80°C/T95°C Db IP65
Approvals	PTB 11 ATEX 1003 X, IECEx PTB 07.0034 X

Errors and omissions excepted.

steute Schaltgeräte GmbH & Co. KG | Brückenstraße 91, 32584 Löhne, Germany | Telefon +49 (0) 5731 745-0, Telefax +49 (0) 5731 745-200 | info@steute.com, www.steute.com