Emergency pull-wire switch
// ZS 71 2Ö/1S WVD 100N KST IP67 -40°C Niro Extreme Order no.: 71942913

Features/Options

- Cold-resistant down to -40°C
- High degree of protection IP67
- Niro version: Pull-wire unit and screws made of stainless steel 1.4305
- Thermoplastic enclosure
- 3 contacts
- Small design
- Wire length up to 35 m
- Release by push button (VD)
- Watertight collar W for protection against penetration of dirt
- Wire pull and breakage detection

Dimensions

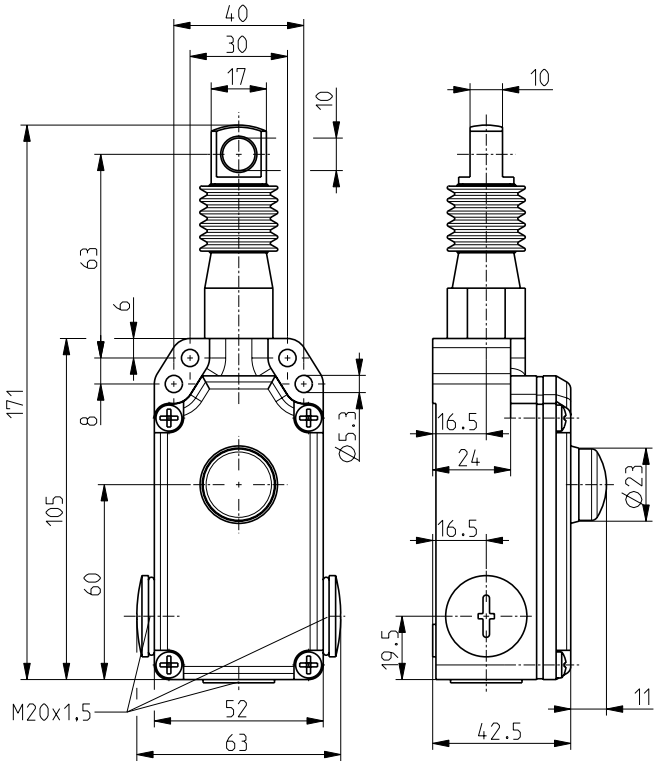

Switching diagram

Snap action

2 NC/1 NO contact

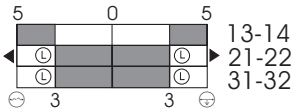

Contact diagram

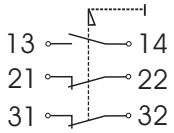

Note:
At 3 m distance intermediate wire supports are required. One wire thimble is provided.

Technical data

Standards	EN ISO 13849-1; IEC/EN 60947-5-1; IEC/EN 60947-5-5; EN 418
Enclosure	glass-fibre reinforced, shock-proof thermoplastic, ultramid
Cover	glass-fibre reinforced, shock-proof thermoplastic, ultramid
Degree of protection	IP 67 to IEC/EN 60529
Contact material	silver
Switching system	snap action, positive break NC contacts ⊖
Switching elements	2 NC/1 NO contacts with double break
Connection	screw terminals
Cable section	max. 2.5 mm² (incl. conductor ferrules)
Cable entry	2 x M20 x 1.5
B_{10d} (10% Load)	200.000
T_M	max. 20 years
U_{imp}	6 kV
U_i	400 V
I_{the}	2 A
Utilisation category	AC-15
I_e/U_e	2 A/250 VAC
Max. fuse rating	6 A gG/gN-fuse
Ambient temperature	–40°C ... +70°C
Mech. life	> 100.000 operations
Max. wire length	35 m
Features	wire pull and breakage detection
Approvals	

Errors and omissions excepted.

steute Schaltgeräte GmbH & Co. KG | Brückenstraße 91 32584 Löhne, Germany | Telefon +49 (0) 5731 745-0 Telefax +49 (0) 5731 745-200 | info@steute.com www.steute.com