Ex pull-wire switches
// Ex 61 WZ 1Ö/1S - 3m Order no.: 61042301

Features/Options

- Ex zone 1 and 21
- Metal enclosure
- Wall mounting
- 2 contacts
- Pull-wire function
- N.B.: Please state required approvals for Russia, China, Brazil and North America with your order!

Dimensions

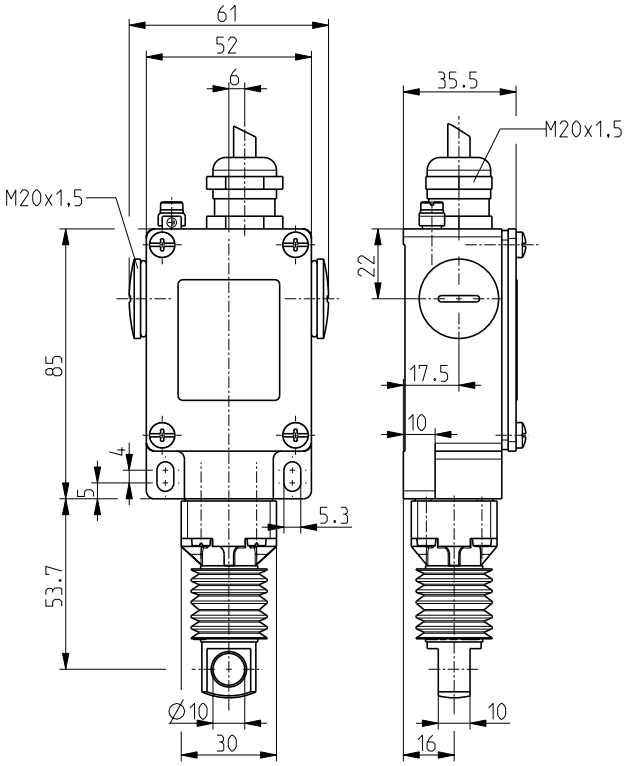

Technical data

Standards	EN 60947-5-1; EN 1088; EN 60079-0, EN 60079-1, EN 60079-31; EN ISO 13849-1
Enclosure	aluminium die-cast, enamel finish
Cover	steel, enamel finish
Switch insert	Ex 14
Degree of protection	IP 65 to IEC/EN 60529
Contact material	silver
Switching system	slow action, positive break NC contact ⊖
Switching elements	change-over with double break Zb, galvanically separated contact bridges
Connection	cable H05VV-F
Cable section	4 x 0.75 mm^2 (incl. conductor ferrules)
Cable length	3 m
B_{10d} (10 % load)	2 million
T_M	max. 20 years
U_{imp}	4 kV
U_i	250 V
I_{the}	T6: 6 A; T5: 3 A
I_e/U_e	6 A/250 VAC; 0.25 A/230 VDC
Utilisation category	AC-15, DC-13
Max. fuse rating	6 A gG/gN fuse
Ambient temperature	T6: –20°C ... +65°C; T5: –20°C ... +95°C
Mechanical life	> 1 million operations
Switching frequency	1800/h
Repeat accuracy	± 0.1 mm
Contact gap	max. 2 x 4.5 mm
Ex certification	Ⓔx II 2G Ex d IIC T6/T5 Gb, Ⓔx II 2D Ex tb IIIC T80°C/T95°C Db IECEx Ex d IIC T6/T5 Gb, Ex tb IIIC T80°C/T95°C Db
Approvals	PTB 03 ATEX 1070 X*; IECEx PTB 06.0098X*
	*referring to the switch insert
Weight	610g

Errors and omissions excepted.

steute Schaltgeräte GmbH & Co. KG | Brückenstraße 91 32584 Löhne, Germany | Telefon +49 (0) 5731 745-0 Telefax +49 (0) 5731 745-200 | info@steute.com www.steute.com